Be sure. testo

Compressed air meter DN 15-50

testo 6451
testo 6452
testo 6453
testo 6454

- Fits all common pipe diameters DN 15 / 25 / 40 / 50
- Four measurement parameters in one instrument: Flow-through, totalizer, temperature, operating pressure
- Direct compressed air monitoring with simultaneous display of three measurement values thanks to TFT display as standard
- Best system integration thanks to two analog outputs 4 to 20 mA
- Highest measurement accuracy, integrated measurement section avoids measurement errors
- Easy and cost-effective installation

°C | l/min | IP65 IP67 | m^3/h | m^3 | bar

In industrial companies, compressed air is an important source of energy which incurs high consumption costs. Testo compressed air meters allow a highly accurate measurement of compressed air consumption, enabling energy-saving potential to be identified and costs lowered. The compressed air meters can also be used for the targeted implementation of environmental management – e.g. according to ISO 50.001 or ISO 14.001.
A further area of application is leakage monitoring in a compressed air system. The compressed air meter can also be used to carry out a peak load analysis in order to determine whether compressed air of sufficient capacity is being generated. The newly developed “all-in-one sensor” records not only the compressed air consumption and the temperature, but also the pressure, eliminating the need for a separate pressure measurement.
The compressed air meters from the testo 645X family use the calorimetric measurement principle, making any additional pressure and temperature measurement superfluous, and which is not subject to wear on moving parts.

Technical data

	testo 6451	testo 6452	testo 6453	testo 6454
Product features				
Diameter	DN15	DN25	DN40	DN50
Process connection	Thread connection R ½	Thread connection R 1	Thread connection R 1 ½	Thread connection R 2
Measuring/adjustment range for flow-through				
Measuring range	4 to 1250 l/min 0.3 to 99.8 m/s 0.25 to 75 m^3/h	14 to 3750 l/min 0.4 to 103.7 m/s 0.8 to 225 m^3/h	20 to 6830 l/min 0.3 to 81 m/s 1.4 to 410 m^3/h	40 to 11670 l/min 0.3 to 84 m/s 2.5 to 700 m^3/h
Temperature coefficient	±0.07 % m.v. 1/K			
Accuracy (in measuring range)	Class 141: ±(2 % m.v. + 0.5 % f.v.); class 344: ±(6 % m.v. + 0.6 % f.v.) ; air quality acc. to ISO 8573-1:2010; at medium temperature +23 °C			
Repeat accuracy	0.8 % m.v.+ 0.2 % f.v.			
Display range	0 to 1500 l/min 0 to 119.8 m/s 0 to 90 m^3/h	0 to 4500 l/min 0 to 124.4 m/s 0 to 270 m^3/h	0 to 8200 l/min 0 to 97.2 m/s 0 to 492 m^3/h	0 to 14000 l/min 0 to 100.8 m/s 0 to 840 m^3/h
Resolution	1 l/min / 0.1 m/s / 0.05 m^3/h	2 l/min / 0.1 m/s / 0.1 m^3/h	10 l/min / 0.1 m/s / 0.2 m^3/h	10 l/min / 0.1 m/s / 0.5 m^3/h
Analog starting point ASP	0 to 1000 l/min 0 to 79.8 m/s 0 to 60 m^3/h	0 to 3000 l/min 0 to 83 m/s 0 to 180 m^3/h	0 to 5460 l/min 0 to 64.8 m/s 0 to 327.9 m^3/h	0 to 9330 l/min 0 to 67.2 m/s 0 to 560 m^3/h
Analog end point AEP	250 to 1250 l/min 20 to 99.8 m/s 15 to 75 m^3/h	750 to 3750 l/min 20.7 to 103.7 m/s 45 to 225 m^3/h	1370 to 6830 l/min 16.2 to 81 m/s 82.1 to 410 m^3/h	2330 to 11670 l/min 16.8 to 84 m/s 140 to 700 m^3/h
Low flow cut-off LFC	1 to 13 l/min 0.1 to 1.1 m/s 0.09 to 0.8 m^3/h	4 to 40 l/min 0.1 to 1.1 m/s 0.3 to 2.4 m^3/h	10 to 70 l/min 0.1 to 0.9 m/s 0.5 to 4.4 m^3/h	30 to 120 l/min 0.2 to 0.8 m/s 2 to 7 m^3/h
Incremental range	1 l/min / 0.1 m/s / 0.01 m^3/h	1 l/min / 0.1 m/s / 0.1 m^3/h	1 l/min / 0.1 m/s / 0.1 m^3/h	1 l/min / 0.1 m/s / 0.1 m^3/h
Measuring/adjustment range for flow-through quantity				
Measuring range	0 to 100000000 m^3 | 0 to 353146667.2 scf			
Display range	0 to 100000000 m^3 | 0 to 353146667.2 scf			
Measuring/adjustment range for pressure				
Measuring range	-1 to +16 bar			
Display range	-1 to +20 bar			
Resolution	0.05 bar			
Analog starting point	-1 to +12.8 bar			
Analog end point	2.2 to 16 bar			
In steps of	0.01 bar			
Measuring//adjustment range for temperature				
Measuring range	-10 to +60 °C | +14 to +140 °F			
Display range	-24 to +74 °C | -11.2 to +165.2 °F			
Resolution	0.2 °C| 0.5 °F			
Analog starting point	-10 to +46 °C | +14 to +114.8 °F			
Analog end point	+4 to +60 °C | +39.2 to +40 °F			
In steps of	0.1 °C| 0.1 °F			
Field of application				
Media	Operational compressed air			
Medium temperature	-10 to +60 °C | +14 to +140 °F			
Min. rupture pressure	64 bar			
Pressure resistance	16 bar			
Electrical data				
Operating voltage	18 to 30 VDC (acc. to EN 50178 SELV/PELV)			
Current consumption	< 80 mA			

	testo 6451	testo 6452	testo 6453	testo 6454
Outputs				
Output signal	2 x analog output signal; 4 to 20 mA (scalable)			
Max. load	500 Ω			
Short circuit protection	Yes			
Pressure monitoring				
Repeat accuracy	±0.2 % of full scale value			
Characteristic curve deviation	< ±0.5 % of final value; (BFSL = Best Fit Straight Line (smallest value adjustment))			
Greatest TC of the span	±0.15 % f.v. / 10 K			
Greatest TC of the zero point	±0.25 % f.v. / 10 K			
Temperature monitoring				
Accuracy	±0.5 K; (for media flow at the limits of the flow measuring range)			
Reaction times				
Response time	0.1 s; (dAP = 0)			
Pressure monitoring				
Response time	0.05 s			
Temperature monitoring				
Response dynamic	T_{09} = 0.5 s			
Ambient conditions				
Ambient temperature	0 to +60 °C			
Storage temperature	-20 to +85 °C			
Humidity	max. permitted relative humidity < 90 %			
Protection class	IP 65; IP 67			
Approvals / tests				
EMC	DIN EN 60947-5-9			
Vibration resistance	DIN EN 68000-2-6 | 5 g (10 to 2000 Hz)			
Mechanical data				
Weight	728.5 g	1598.5 g	2262 g	2650.5 g
Materials	PBT+PC-GF30; PPS GF40; 1.4301 (stainless steel / 304); 1.4305 (stainless steel / 303); 1.5523 (steel) galvanized; 2.0401 (brass / CW614N); FKM			
Media contact	1.4301 (stainless steel / 304); 1.4305 (stainless steel / 303); FKM; glass-passivized ceramic; PPS GF40; Al2O3 (ceramic); acrylate			
Display / control elements				
Display	Colour display - 1.44” | pixel resolution - 128 x 128			
Comments				
Comments	m.v. = measurement value f.v. = final value of measuring range Measurement, display and adjustment ranges refer to norm volume flow according to DIN ISO 2533. Please see the instruction manual for information on installation and operation.			
Electrical connection				
Plug-in connection	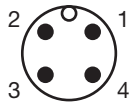			
Connections	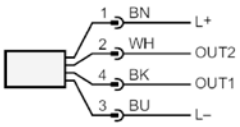	1 - 18 to 30 VDC (+) 2 - Analog output pressure, temperature or flow-through 4 - Analog output pressure, temperature or flow-through 3 - GND (-)		brown white black Blue

Technical drawings

testo 6451

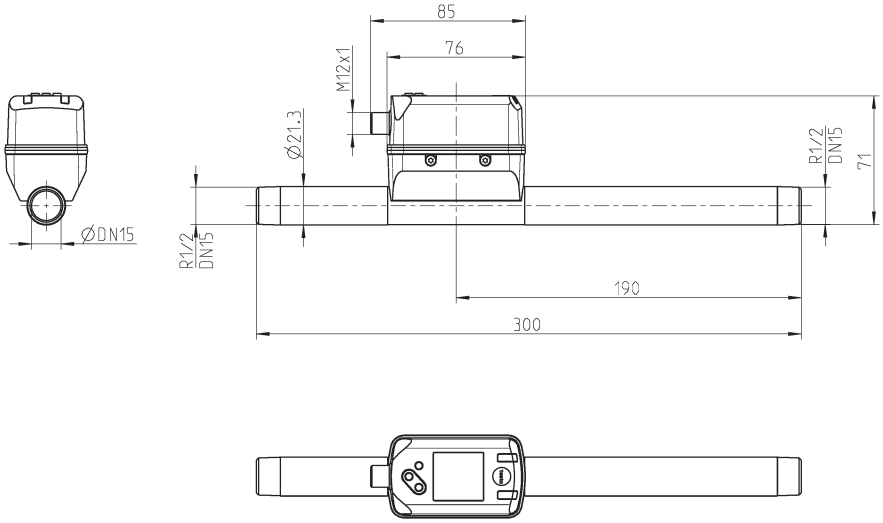

testo 6452

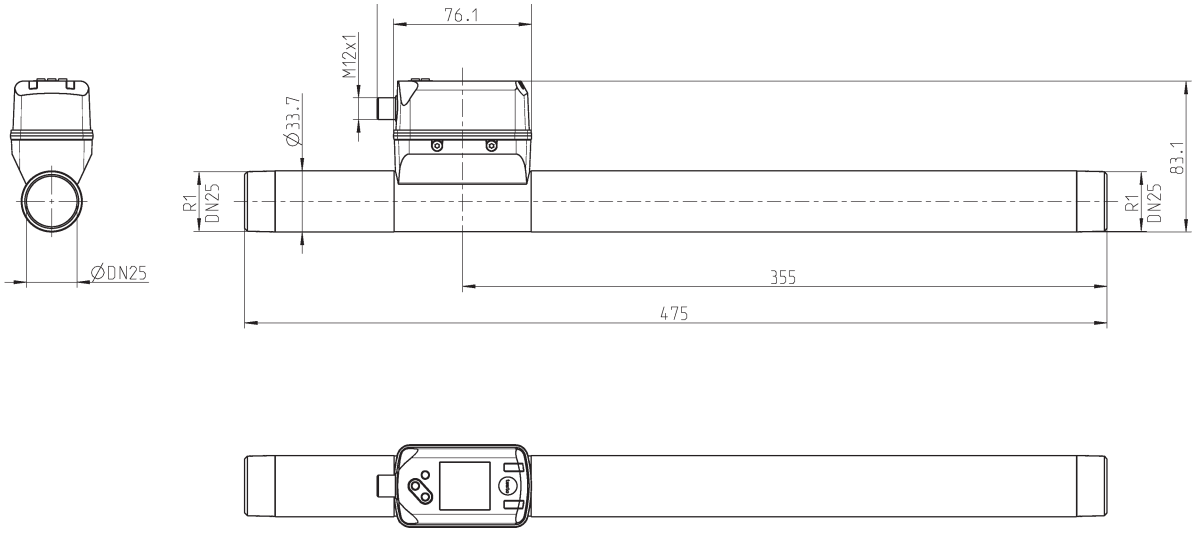

Technical drawings

testo 6453

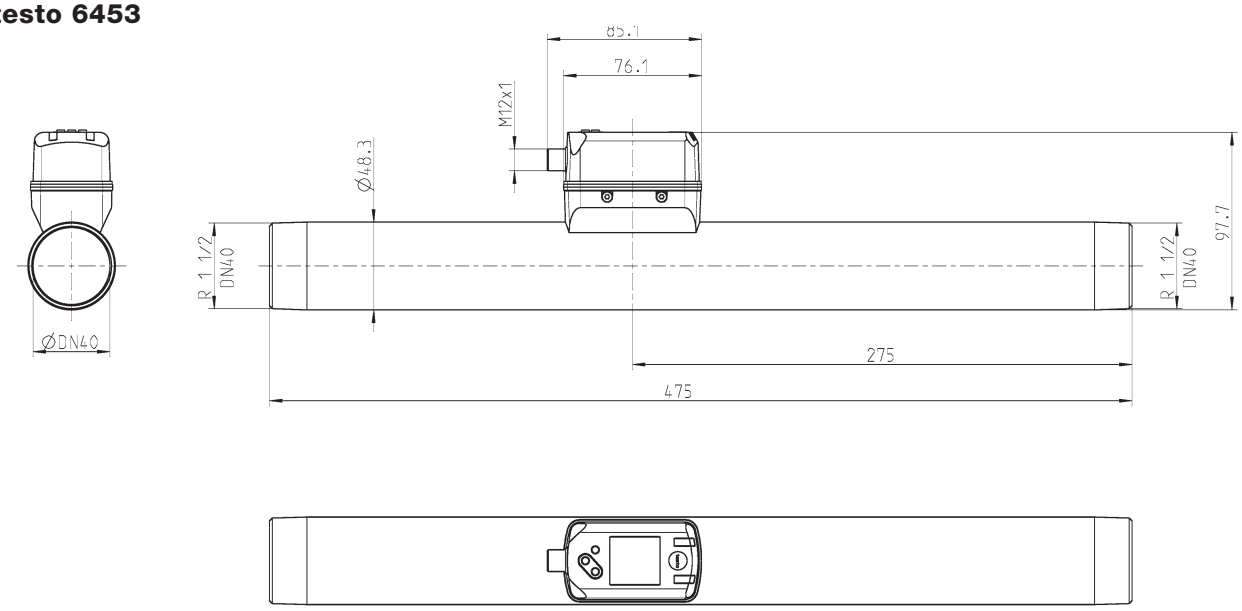

testo 6454

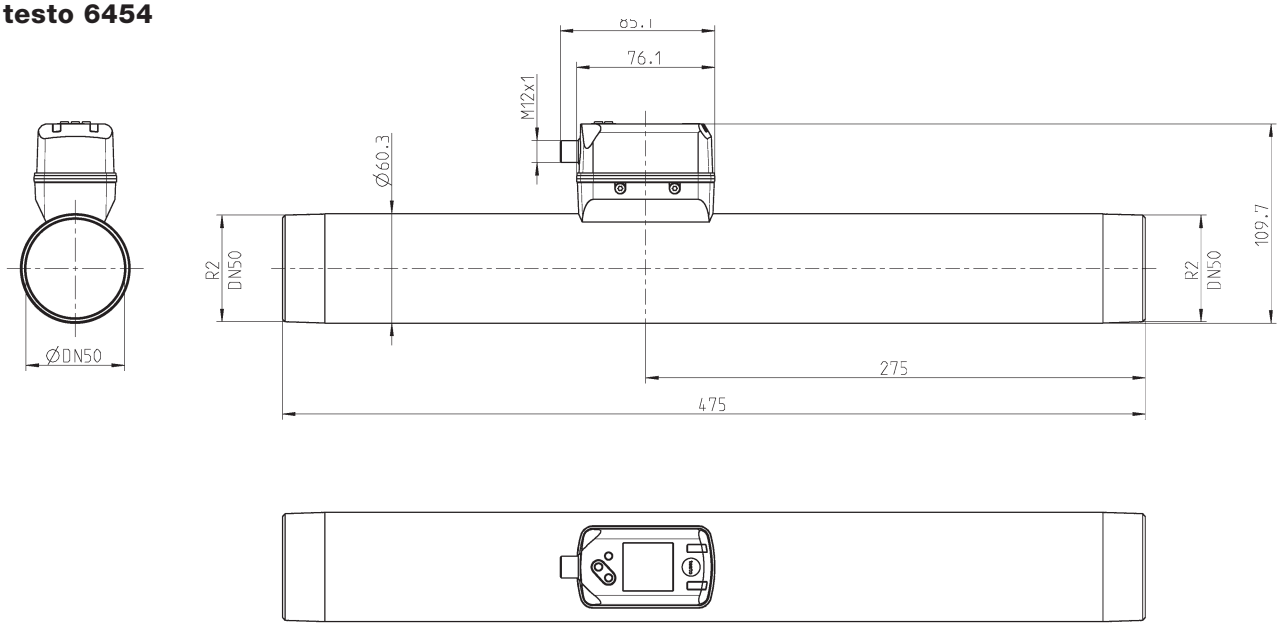

Ordering data

testo 6451

testo 6451 compressed air meter including inflow/outflow section, diameter DN15 (½"), analog output and integrated pressure measurement *

Order no. 0555 6451

testo 6452

testo 6452 compressed air meter including inflow/outflow section, diameter DN25 (1"), analog output and integrated pressure measurement *

Order no. 0555 6452

testo 6453

testo 6453 compressed air meter including inflow/outflow section, diameter DN40 (1½"), analog output and integrated pressure measurement *

Order no. 0555 6453

testo 6454

testo 6454 compressed air meter including inflow/outflow section, diameter DN50 (2"), analog output and integrated pressure measurement *

Order no. 0555 6454

* a connection cable, e.g. order no. 0699 3393 is required for operation

Accessories

Connections			Order no. 0699 3393
	Connections	1 Supply connection 18 to 30 VDC (+) 2 Analog output pressure, temperature, or flow-through (4 to 20 mA) 4 Analog output pressure, temperature, or flow-through (4 to 20 mA) 3 Supply connection GND (-)	brown white black Blue
	Cable length	5 metres	
	Plug-in connection	M12 plug connection	

Mains unit (desktop appliance)			Order no. 0554 1748
	Input	110 to 240 VDC	
	Output	24 VDC/ 350 mA	

Mains unit (top-hat rail mounting)			Order no. 0554 1749
	Input	85 to 264 VAC | 110 to 300 VDC	
	Output	24 VDC/ 2.5 A	

msp/10.2021

Subject to change, including technical modifications.